OPTIMAL 22/23

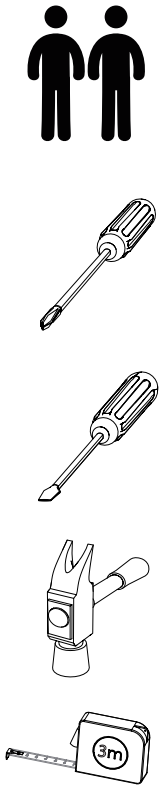

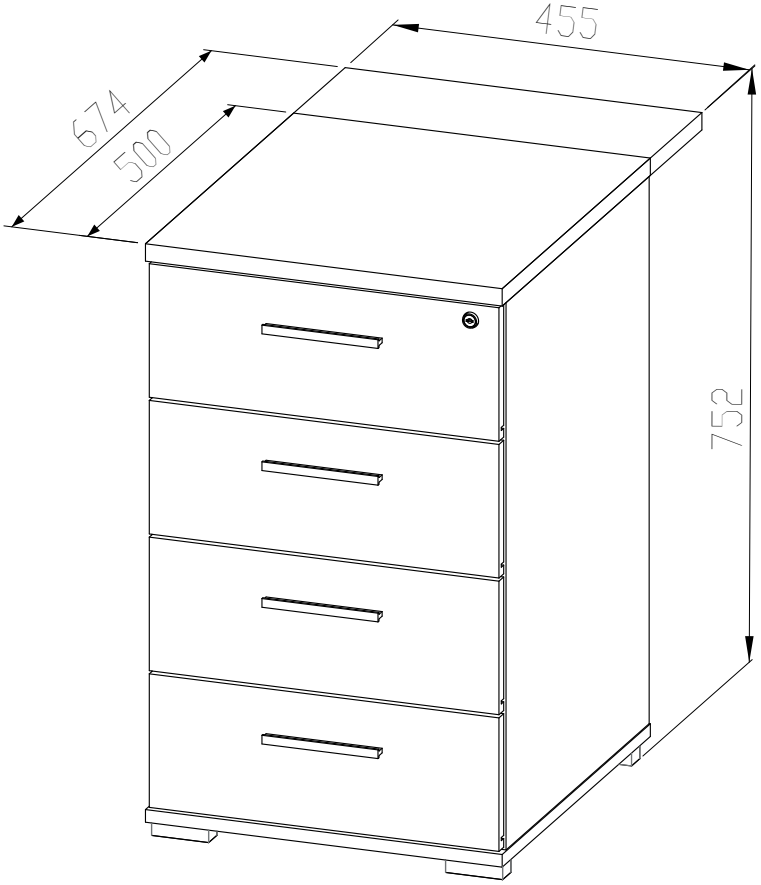

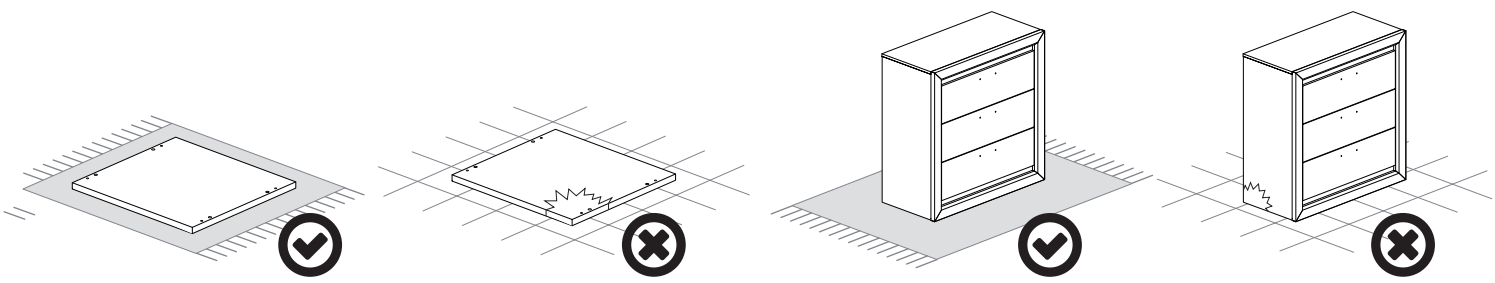

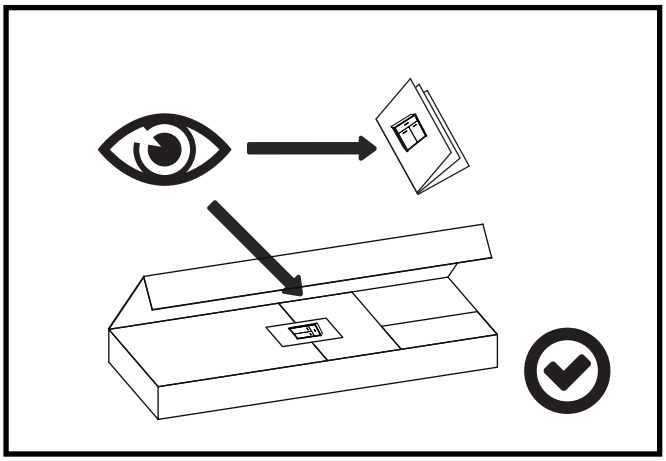

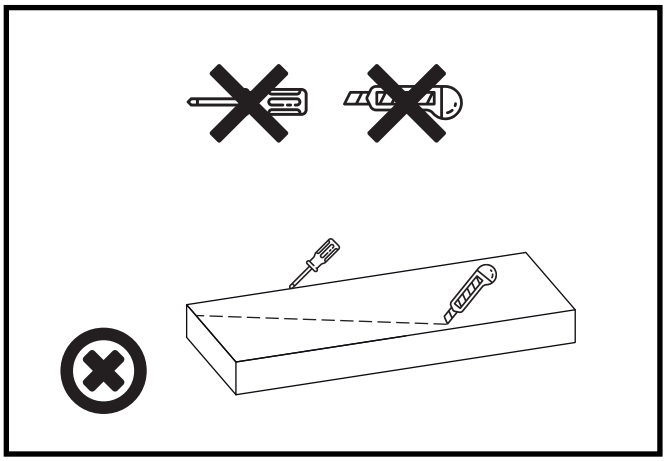

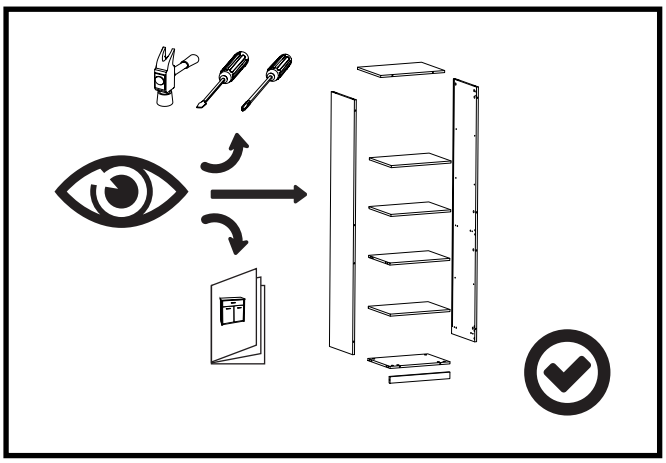

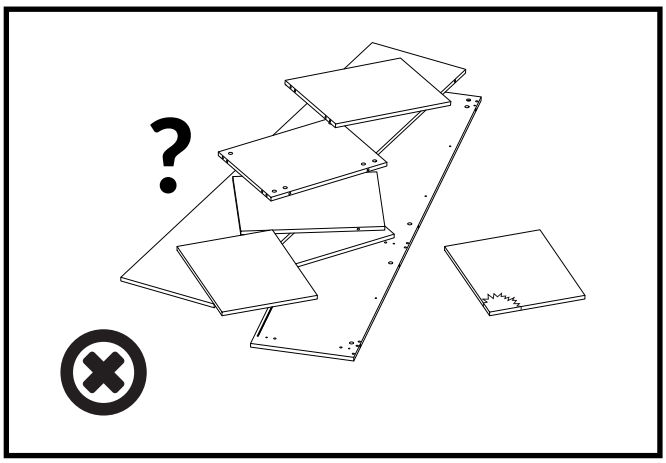

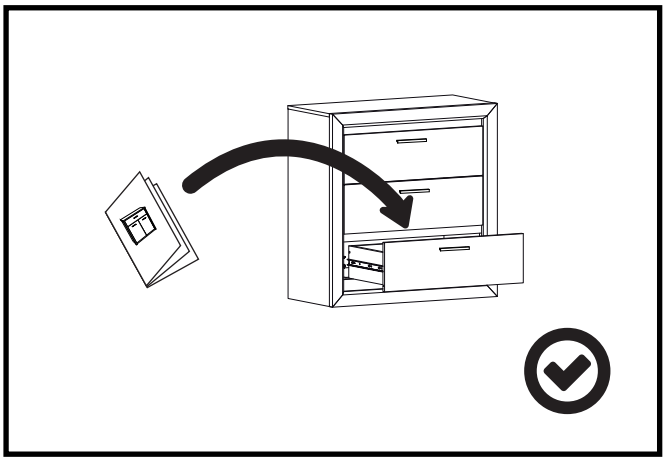

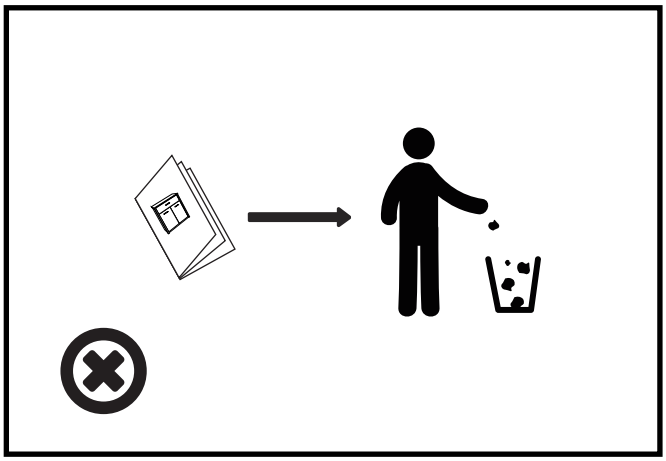

OPTIMAL 22/23

K1 x 34 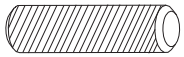	WT31 x 8 4x25 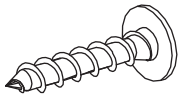	B2 x 12 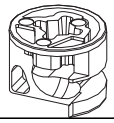
ZS2 x 8	WT1 x 50 3,5x15 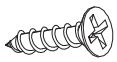	x 1
ZJ1 x 12	KT1 x 10 6,3x50 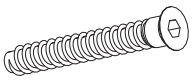	KL x 1
ST2 x 4 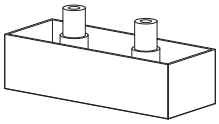	GW1 x 20	WT9 x 16 3x16 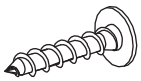
UO x 4 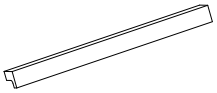	ZZC x 4 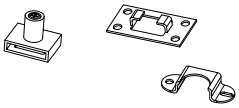	LZC x 1 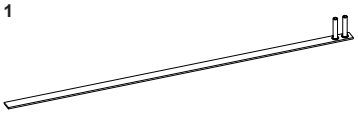
ZC1 x 1 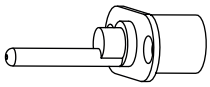		

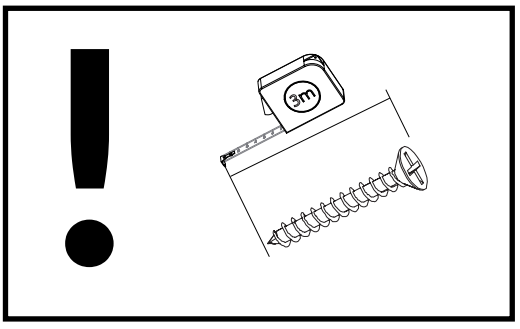

OPTIMAL 22/23

1	455	674	1
2	455	500	1
3	694	483	1
4	694	483	1
5	694	420	1
6	446	169	1
7	446	169	3
9	112	350	8
10	363	112	4
11	390	355	4
12	455	500	1

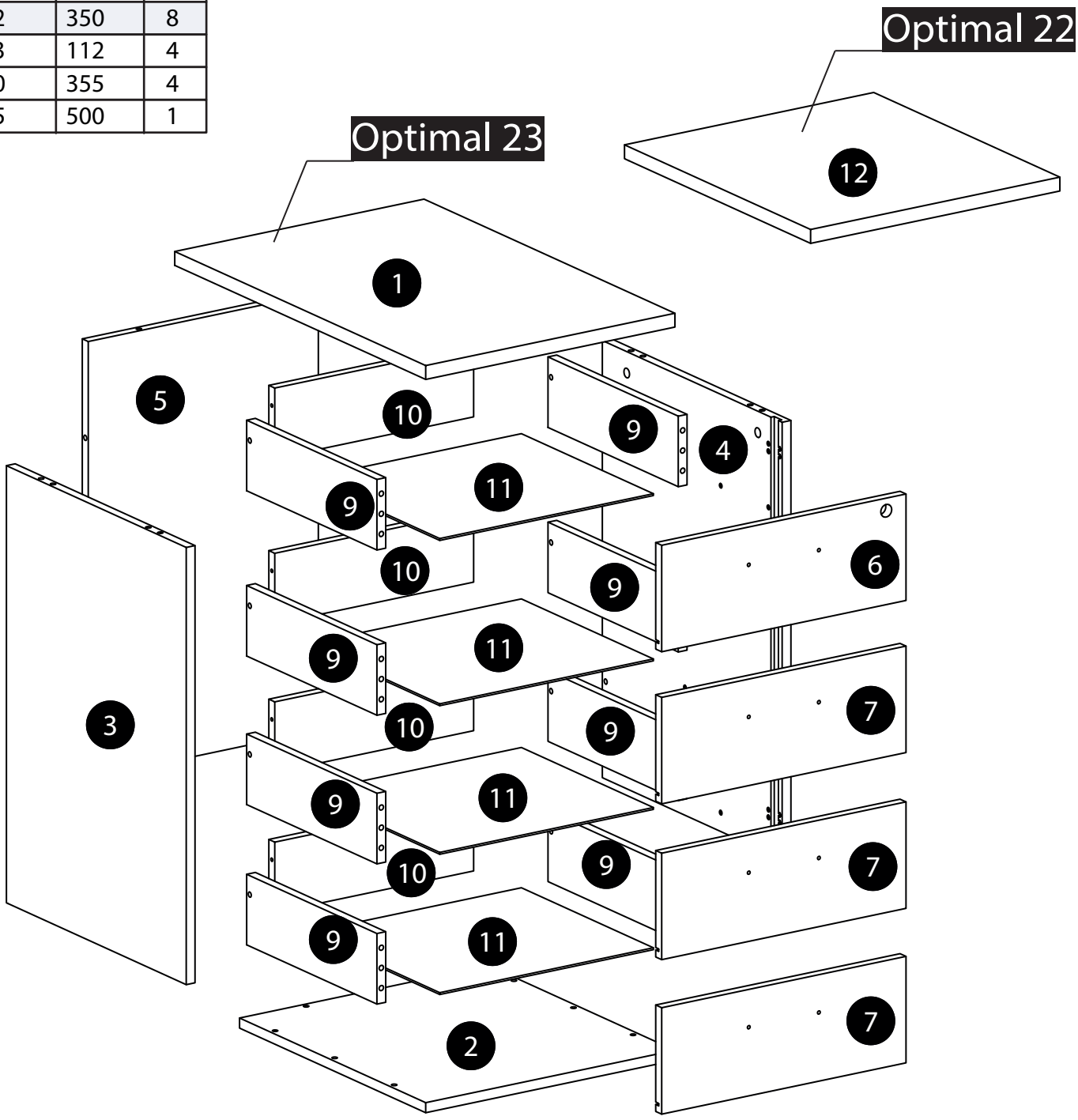

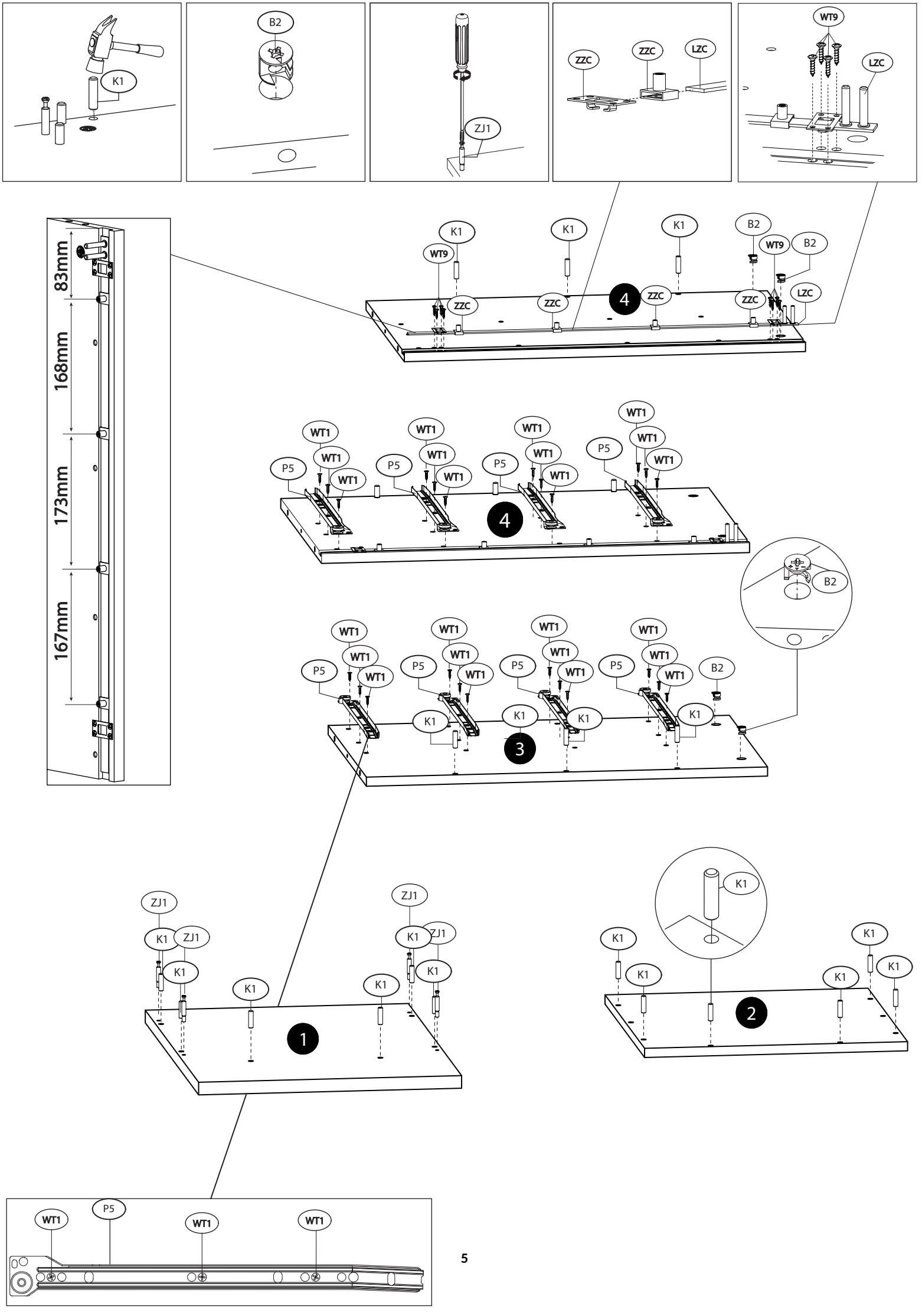
K1
B2
ZJ1
ZZC
LZC
WT9
83mm
168mm
173mm
167mm
WT1
P5
4
3
2
1

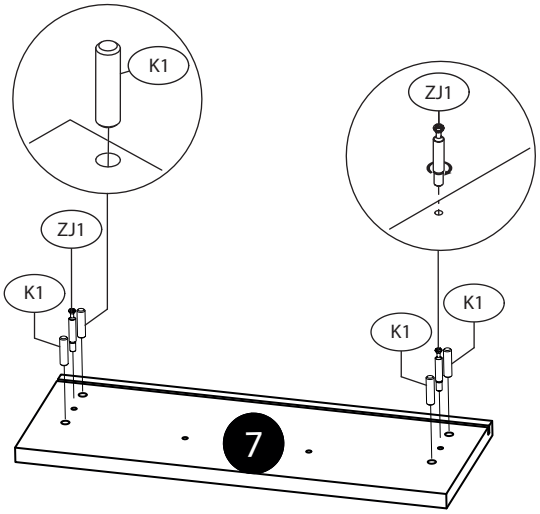
K1
ZJ1
K1
ZJ1
K1
K1
7

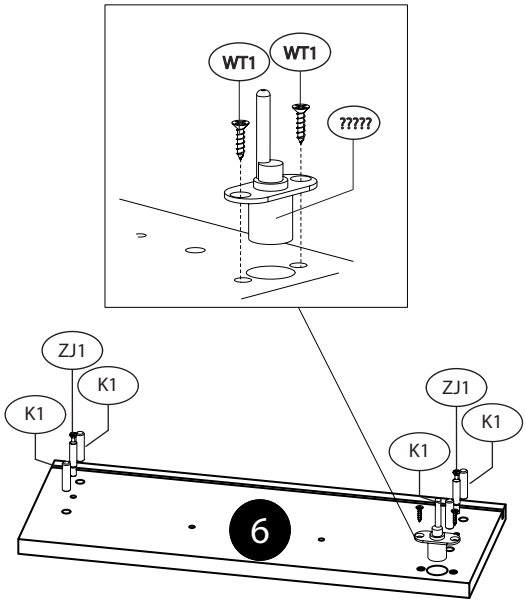
WT1
WT1
?????
ZJ1
K1
K1
ZJ1
K1
K1
6

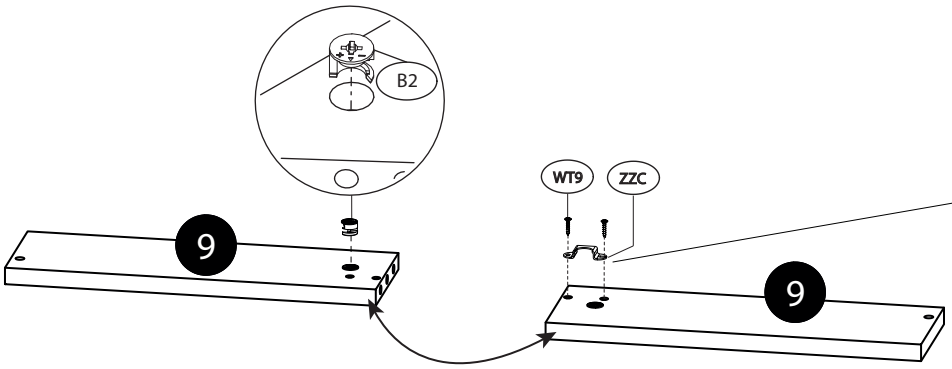
B2
WT9
ZZC
9
9

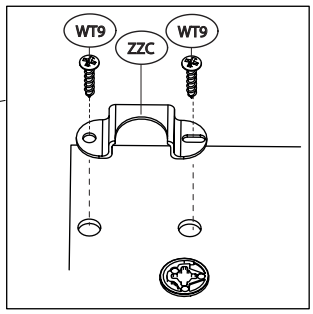
WT9
ZZC
WT9

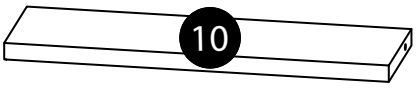
10

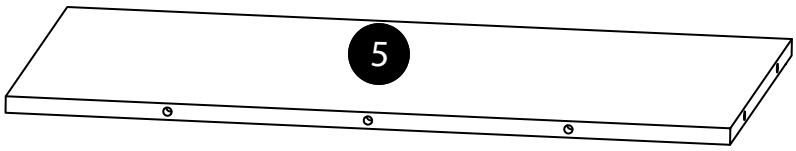
5

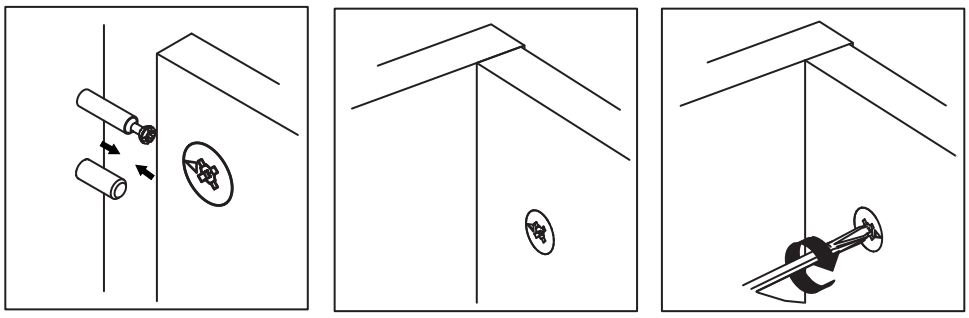

A

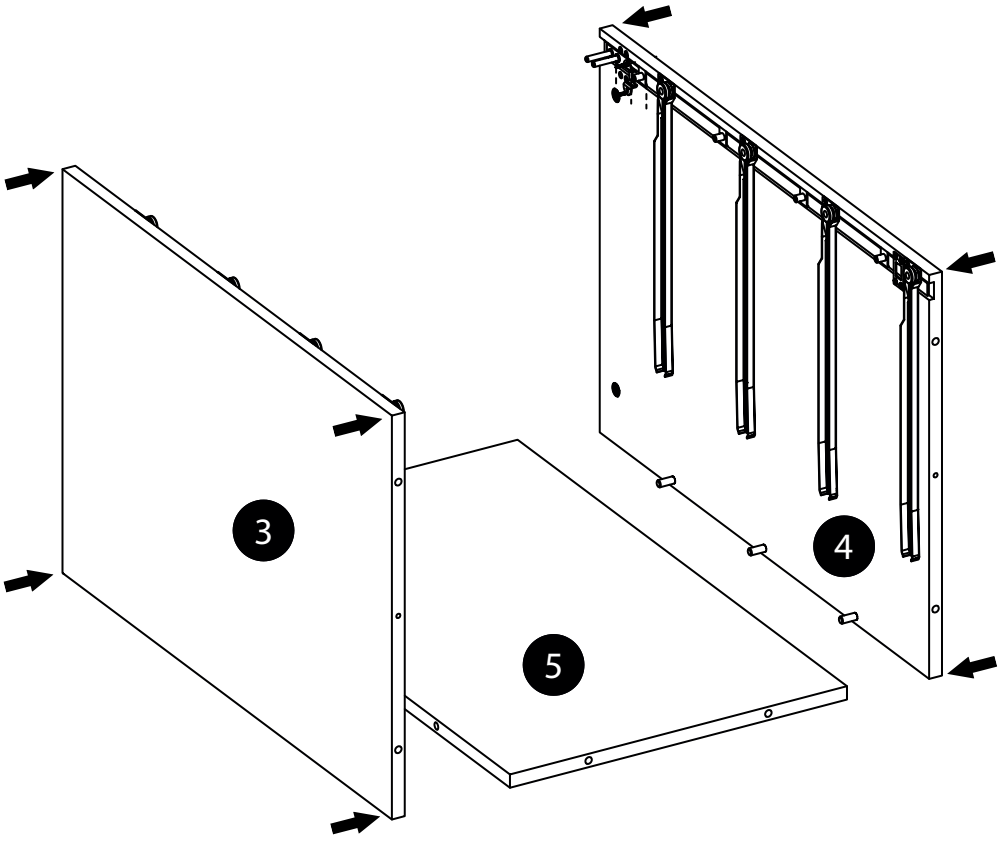

B

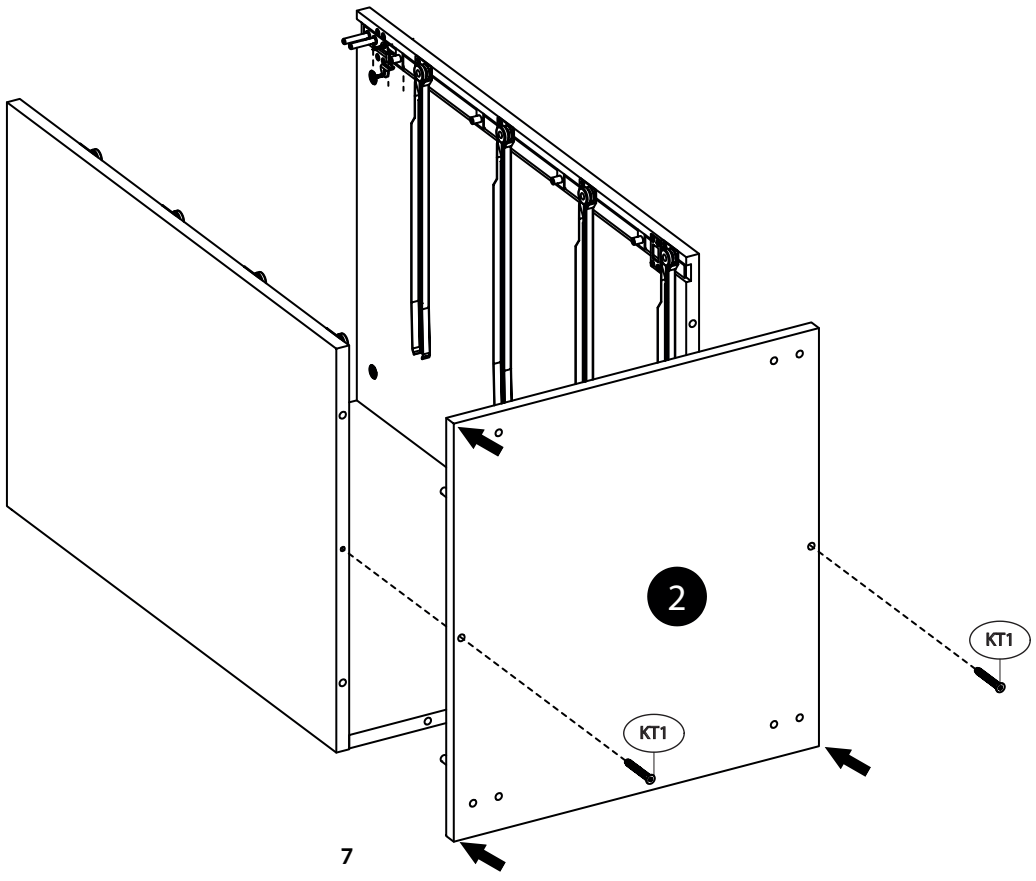

C

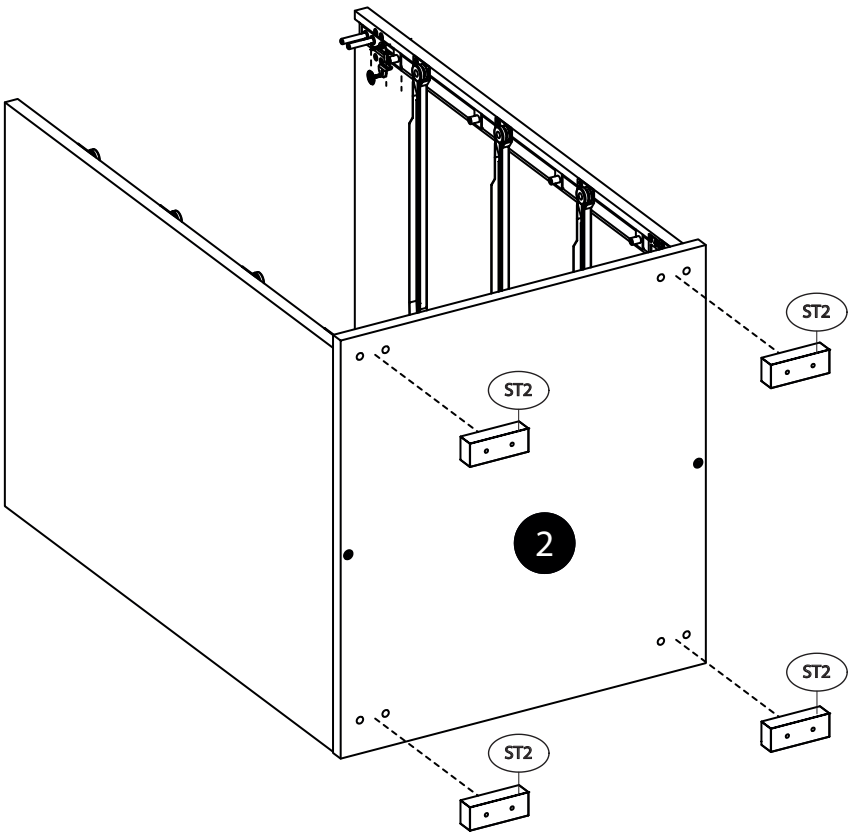

D

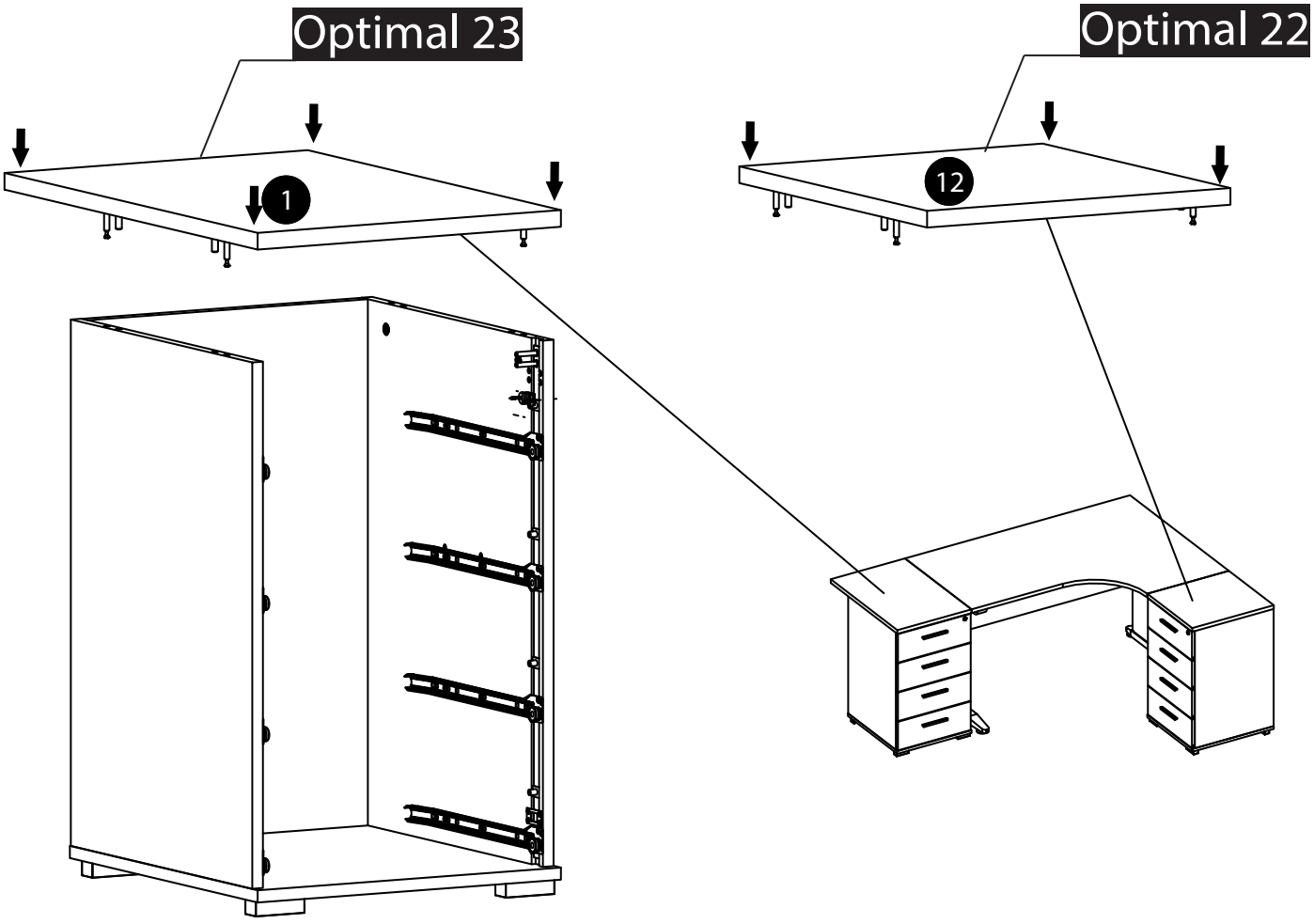

E ▶

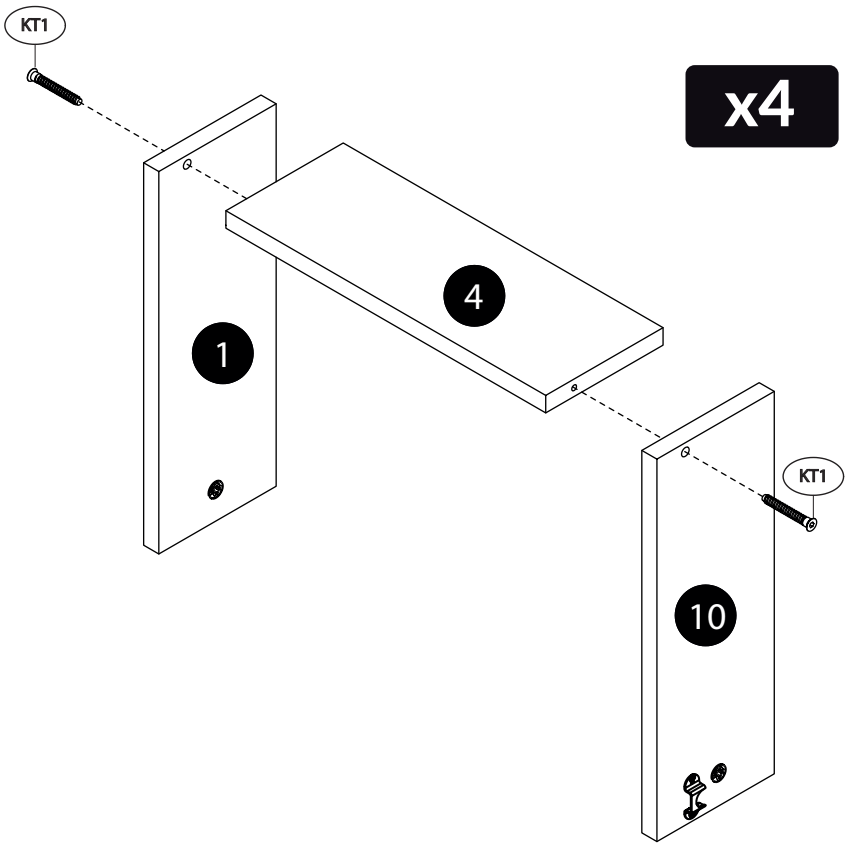

F ▶

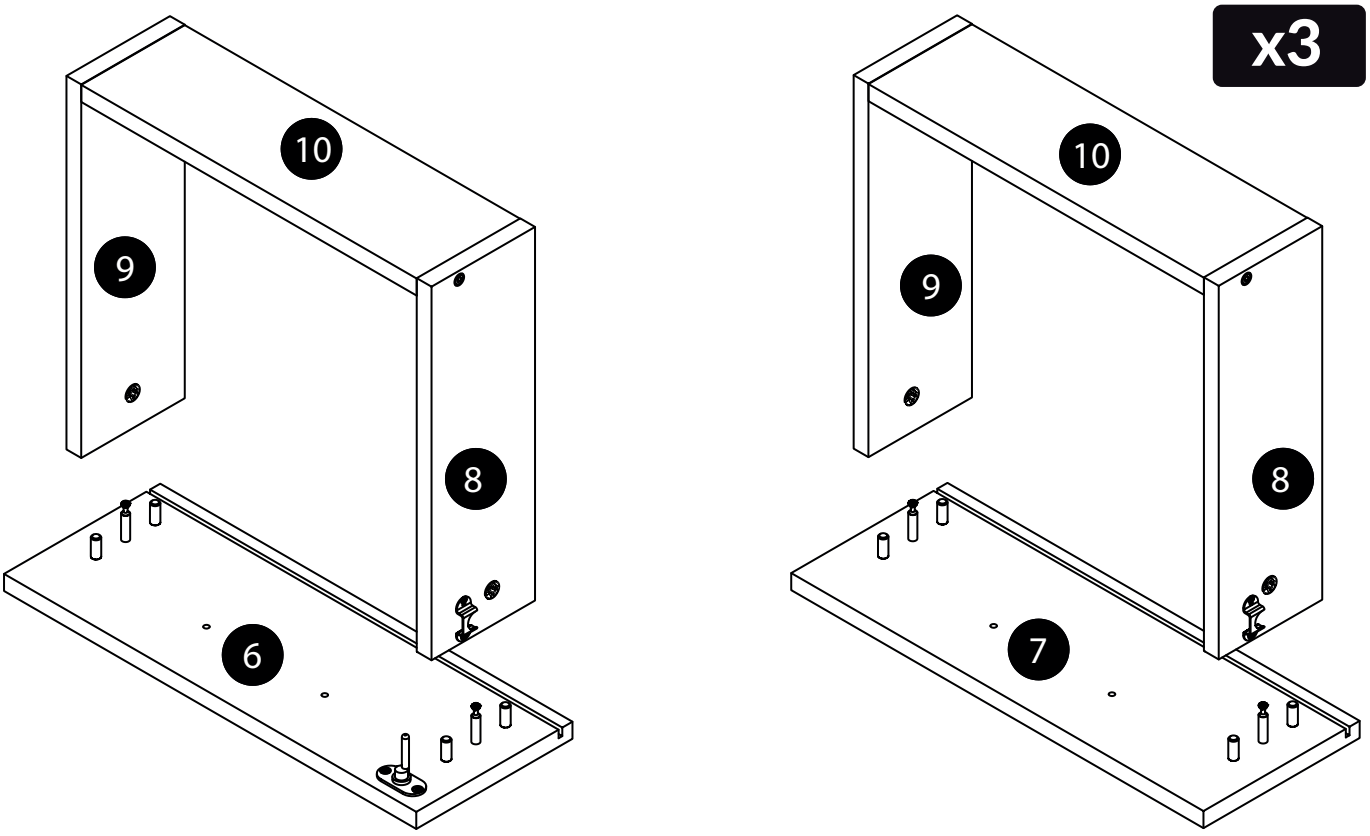

G

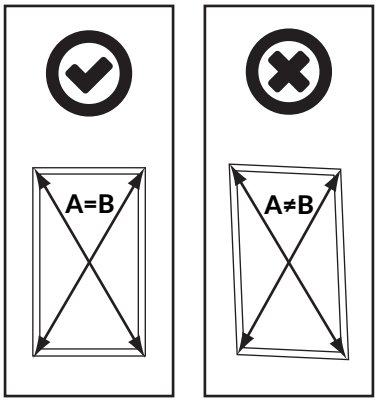
A=B
A≠B

x4

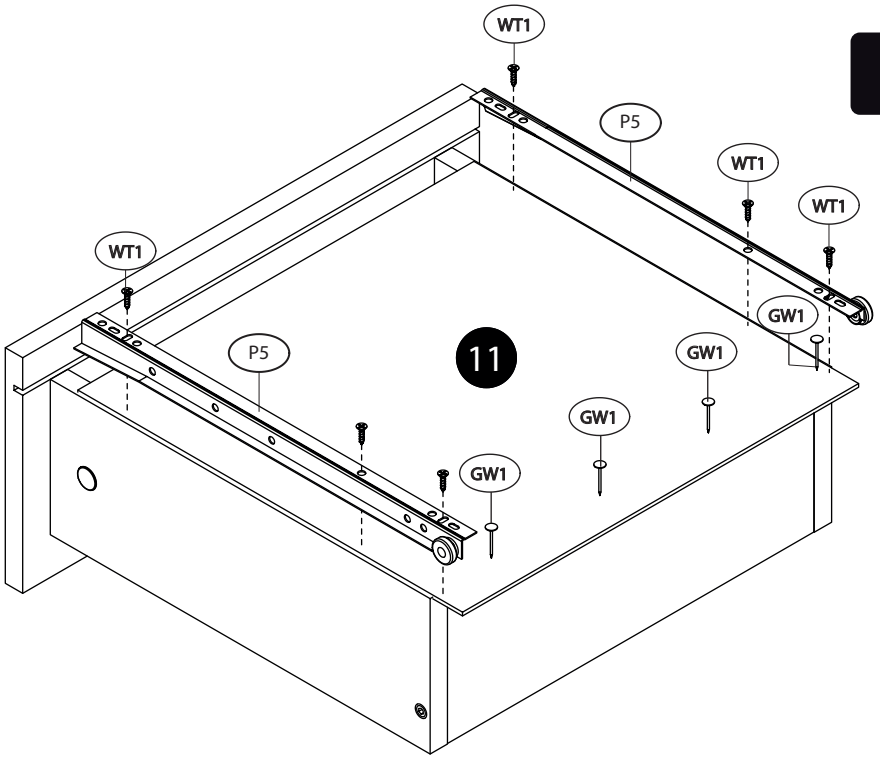
WT1
P5
WT1
WT1
WT1
GW1
P5
11
GW1
GW1
GW1

H

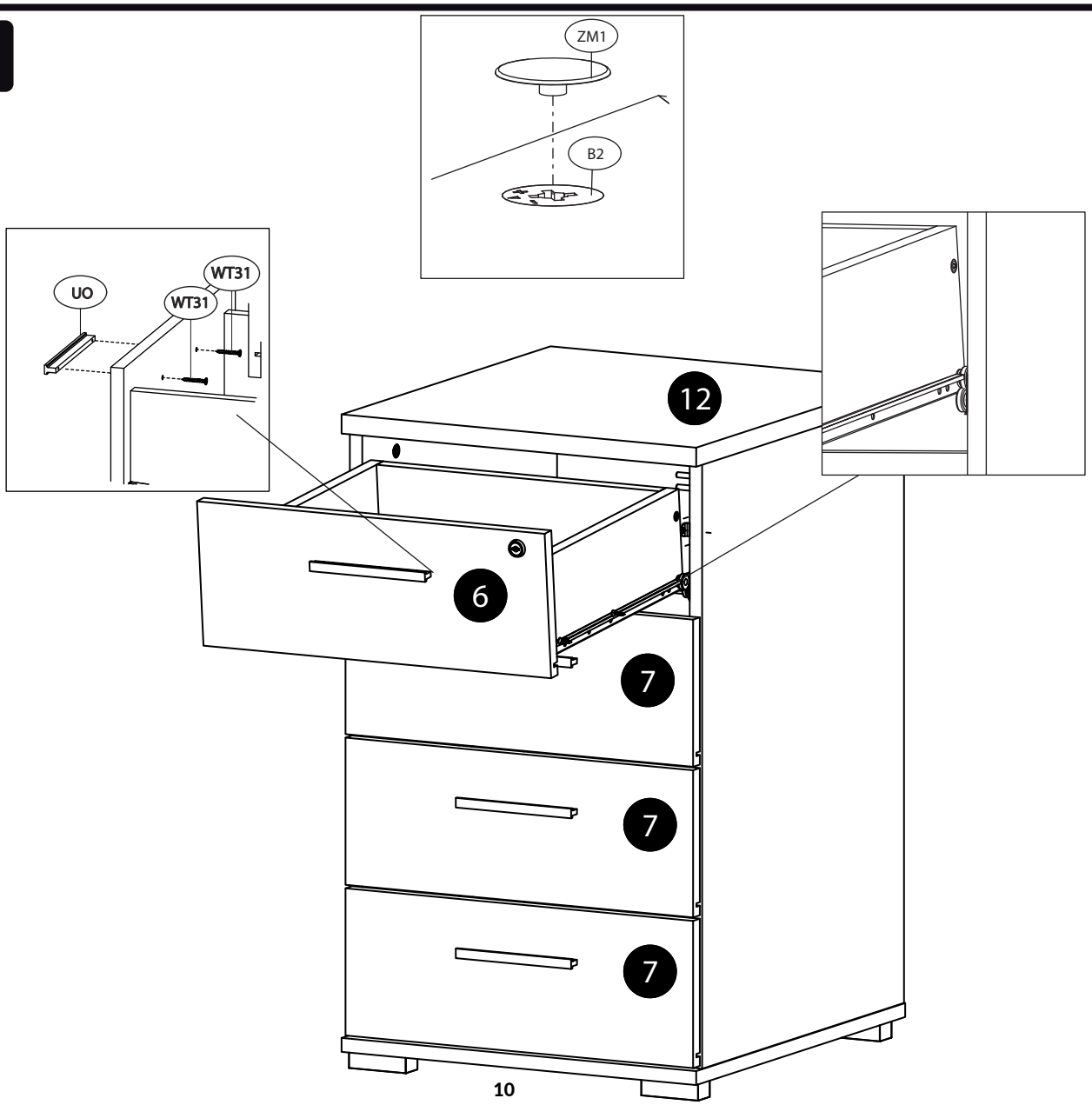
ZM1
B2
UO
WT31
WT31
12
6
7
7
7

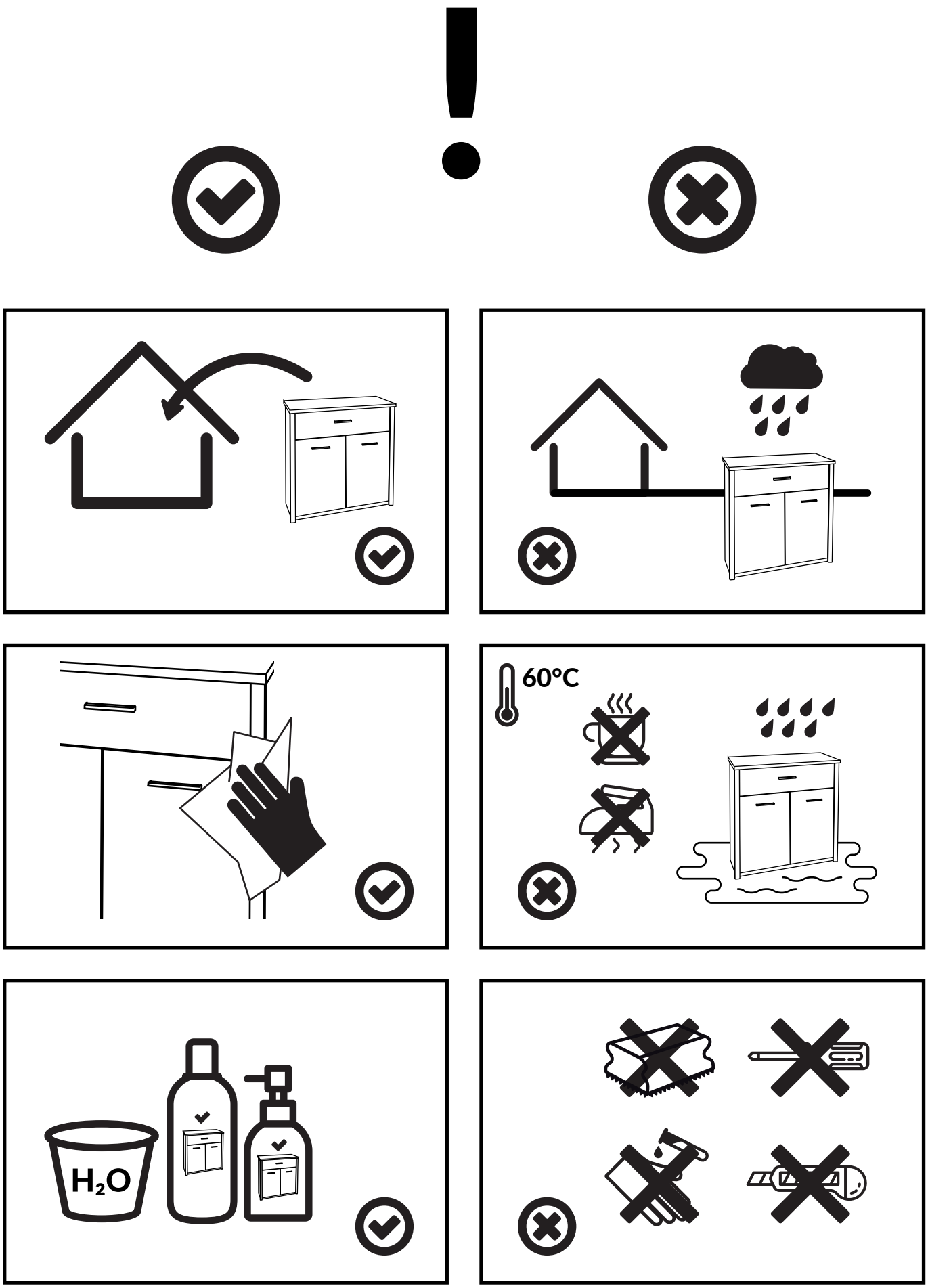
60°C
H2O